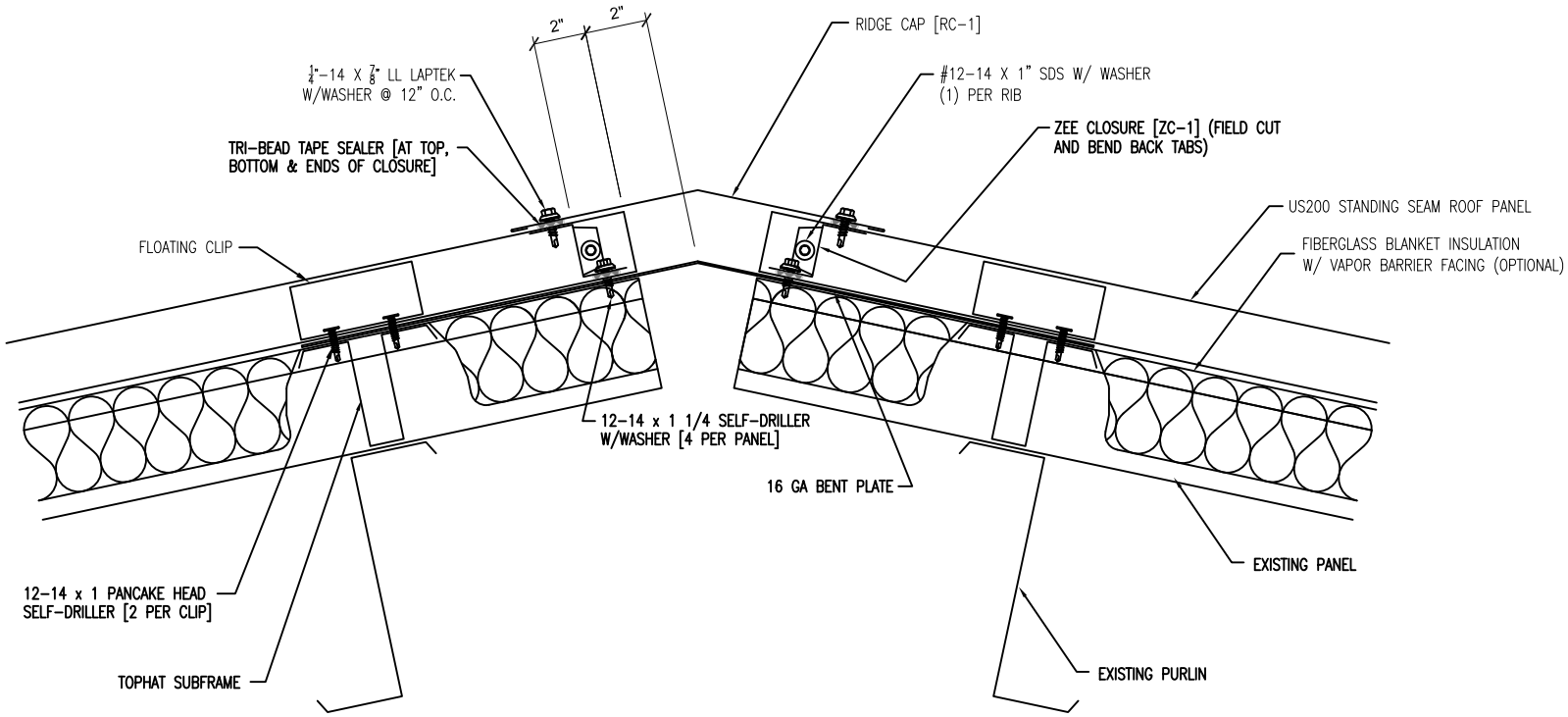

RIDGE DETAIL

US200 SYSTEM

TopHat Framing Systems, LLC

OH: (888) 459-0421

TX: (866) 361-4141

www.tophatframing.com